Jig Arbour

RADIUS
OFFICE

SOLID OAK FRAME

A QUIET RETREAT IN SERIOUS LUXURY

Based on the stylish Jig soft seating, with its optional contrasting buttons and beautiful oak frame, Jig Arbour is enhanced with a roof for added privacy.

Step across to the Jig Arbour for a quiet thinking moment or a creative discussion with a colleague. It's the workplace equivalent to the shady retreat of the garden.

_Effective acoustic design reduces noise
_Complete with LED lighting in the roof as standard
_Solid oak frame for heavy-use areas
_Webbed cushion for an extremely comfortable seat
_Extensive choice of fabrics, vinyls and leathers
_Optional contrasting buttons*

*All buttons will be matching fabric unless specifically requested. If contrasting buttons are required, please select colour from same fabric range as settee. No up-charge for contrasting buttons from the same fabric range.

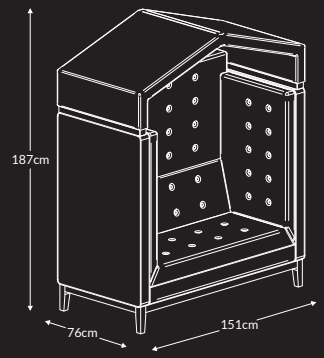

Jig Arbour Two Seater

Fabric Band	Order Code Natural Oak	Black Oak	Stained Walnut
ECO	JA2K/FX	JA2BK/FX	JA2W/FX
A	JA2K/FA	JA2BK/FA	JA2W/FA
B	JA2K/FB	JA2BK/FB	JA2W/FB
C	JA2K/FC	JA2BK/FC	JA2W/FC
D	JA2K/FD	JA2BK/FC	JA2W/FD
E	JA2K/FE	JA2BK/FE	JA2W/FE
F	JA2K/FF	JA2BK/FF	JA2W/FF
G	JA2K/FG	JA2BK/FG	JA2W/FG